Additel

Metrology Made Simple



ADT286-TS/PS Calibration Manual

ADT286-TS/PS Calibration Manual

Table of Contents

1.0 - Scope.....2
2.0 - Recommended Equipment and Specifications.....2
3.0 - Initial Operating Conditions.....3
4.0 - General Diagram and Description.....4
5.0 - Date & Time.....7
6.0 - CJC Verification.....7
7.0 - CJC Calibration.....9

1.0 - Scope

The Additel ADT286 is a multifunction reference thermometer readout device. This device is able to measure and calibrate SPRT's, RTD's, thermistors, and thermocouples. The capabilities of this unit include a 1 parts per million (PPM) resistance ratio accuracy on Channel 1, 8.5 digital DC multimeter, and measurements of up to 82 channels. The functions of this unit include built in automatic temperature control, data collection, and coefficient generation. The readout is equipped with a 10.1 inch touch screen display and multiple means of communication (Bluetooth, WIFI, USB, and Ethernet). This multifunction reference thermometer readout is an innovative device with the capability, functionality, and automation that proves beneficial to any calibration laboratory.

2.0 - Recommended Equipment and Specifications

Equipment	Specification/ Description	Recommended Model/ Item Number
Multifunction Reference Thermometer Readout	Applicable to the ADT286-TS/PS	ADT286
Temperature Source	Applicable to the ADT286-TS/PS	ADT875PC-155
Temperature Reference	Applicable to the ADT286-TS/PS	AM1710-12-ADT
Thermocouple	Characterized Type E	-
Temperature Insert	Low temperature insert, insulation piece and plugs	ADT110-875-L-INSERT-C

3.0 - Initial Operating Conditions

- The 286-TS or 286-PS module is embedded into the base 286 unit.
- The 286 has been turned ON for at least 2 hours, allowing the unit to warm up.
- The temperature reference is immersed into the 875 and the smart connector is plugged into the EXT port of the front PC board.
- The bead end of the Type E Thermocouple kit is also immersed into the 875. The temperature reference and thermocouple should be immersed next to each other and at the same depth.
- The bare wire ends of the Type E Thermocouple are connected to each of the channels on top of the TS or PS module. TS has 20 channels while PS only has 1 channel.
- Place the 286-TS cover on top of the module. This reduces the air draft over the thermocouple connections and improves CJC stability.
- The 875 is set to a stable temperature of 20°C.
- The lab environment is maintained at 23°C $\pm$ 2°C with less than a 70% relative humidity.
- Allow this setup to sit for at least 90 minutes so that the internal CJC sensors and thermocouple wires are well stabilized to the ambient temperature. It is critical that the 286-TS and type E thermocouples have come to equilibrium with the ambient temperature.

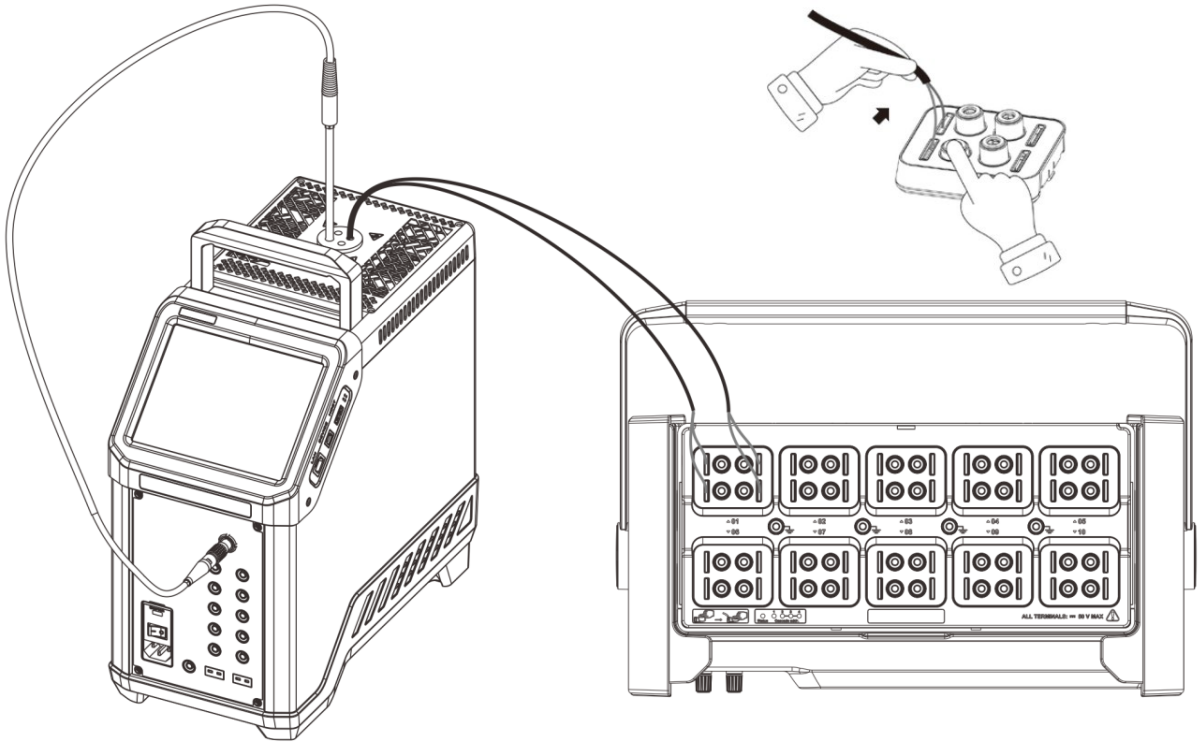

4.0 - General Diagram and Description

Diagram 4.0 - ADT286 Basic Structure

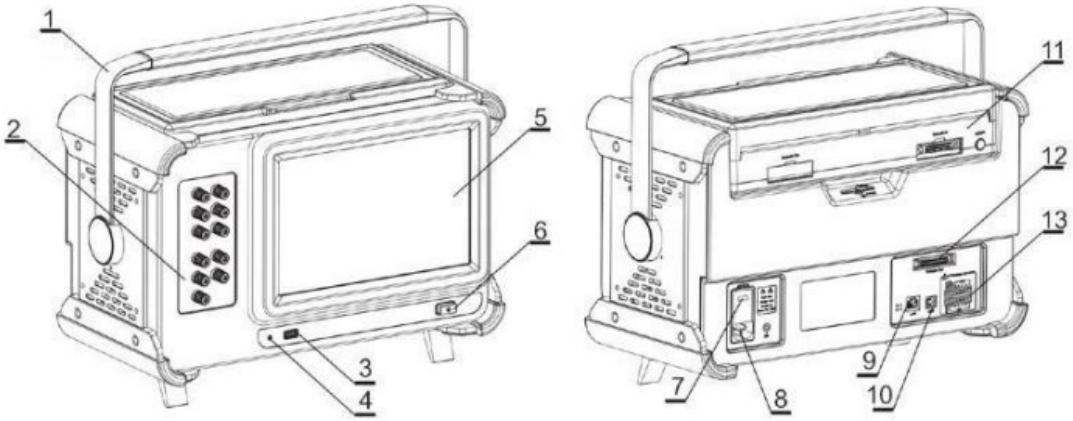

ADT286 Basic Structure		
No.	Name	Description
1	Handle	Can be rotated to various positions
2	Input terminals (REF1, REF2)	2 front channel measurements which can be connected to devices
3	USB port (Type A)	Connects to USB drive for data export and system updates
4	Indicator light	Indicates whether or not the thermometer is in standby mode
5	Touch screen display	Main screen used to navigate and display the functions of the device
6	Power button	Press to turn the unit ON/OFF
7	Power specification (100, 120, 230, 240 VAC)	Displays the power voltage of the unit
8	AC port	Connects to power supply cable
9	Ethernet port (RJ45)	Connects to Ethernet cable for internet access
10	USB port (Type B)	Connects to USB cable for computer communication
11	Signal scanner	Temperature or process scanners which can be embedded into the unit
12	Cascade DSUB port	Connects cable for cascade wiring of signal scanners
13	DIO port	Connects cable for input and export of digital quantity

Diagram 4.1 - ADT286-TS Basic Structure

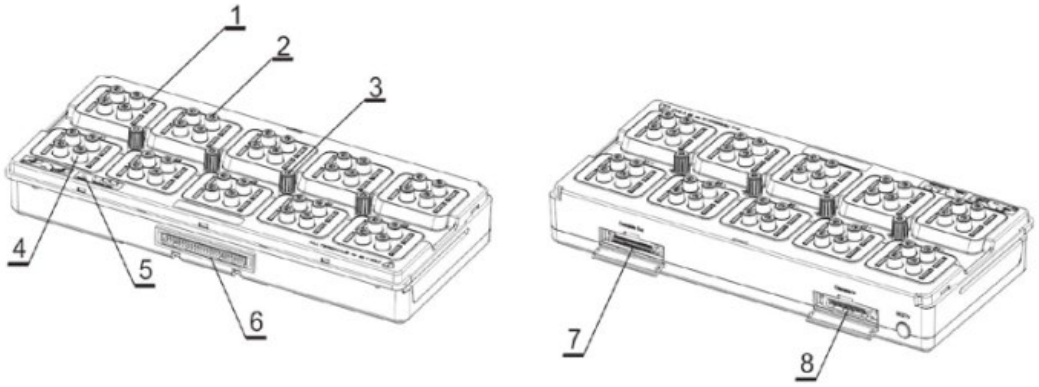

ADT286-TS Basic Structure		
No.	Name	Description
1	Wire connections	Each channel support 2, 3, or 4 wire connections. The scanner can connect to 20 devices using a 2 wire connection or connect to 10 devices using a 3 or 4 wire connection.
2	Cold junction sensor	Built in cold junction compensation sensors are located at each channel
3	Grounding receptacle	Ports used for grounding connections
4	Amphenol connector	Quick press connectors that supports bare wire, shovel, Mini TC, banana plugs, etc.
5	Indicator lamp	Lights indicating if the scanner is receiving power and if it is cascading to another scanner
6	Embedded connection port	Port that connects the signal scanner to the 286 mainframe
7	Cascade output	Output connection for cascading the next level
8	Cascade input	Input connection for cascading the upper level

Diagram 4.2 - ADT286-PS Basic Structure

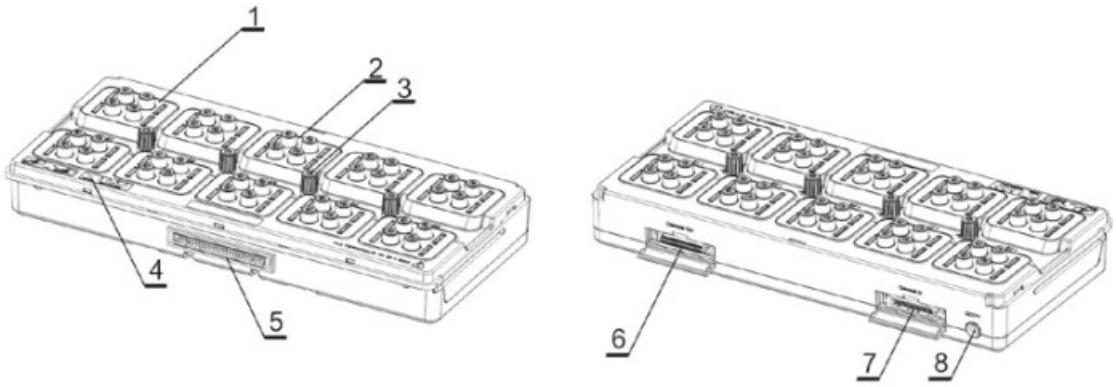

ADT286-PS Basic Structure		
No.	Name	Description
1	Channel 1	Channel 1 is a reference channel, which can connect with SPRT or standard thermocouples
2	DUT channels	Channels 2-10 are used for devices under test (DUT)
3	Grounding receptacle	Ports used for DUT ground connections of sensor
4	Indicator lamp	Lights indicating if the scanner is receiving power and if it is cascading to another scanner
5	Embedded connection port	Port that connects the signal scanner to the 286 mainframe
6	Cascade output	Output connection for cascading the next level
7	Cascade input	Input connection for cascading the upper level
8	Adapter port (DC27V)	Port that supplies 24V loop power to channels 2-10

Note: This calibration manual is only for the ADT286-TS and ADT286-PS modules. A separate calibration manual has been made for the base model ADT286.

5.0 - Date & Time

1) Plug in the power cord to the AC port (back) and press the **Power Button** (front) to turn the unit ON.

2) Press the **Menu Icon** (top right) to open up the options.

3) Press **Setup** then press **Personalization**.

4) Press **Date & Time** to view the following parameters: Time, Date, Date Format, Date Separator, 24-Hour Time, and Time Zone. If necessary, use the touch screen display to adjust any of these parameters.

5) Press the **Back Icons** (top right) to return to the main display.

6.0 - CJC Verification

1) Press the **Menu Icon** then select **Multichannel Thermometer**.

2) Press the **Tools Icon** (top left) and select **Display Settings**.

3) Set the Temperature Units to **°C**, Sampling Rate to **Slow**, Display Digits to **9**, Temperature Display Digits to **9**, Filter to **1**, and Graph Type to **OFF**. Press the **Check Icon** (bottom right) to confirm the display settings.

4) Press the **Tools Icon** again and select **Channel Settings**.

5) Press the **1-Temperature** tab (top). The main channels are displayed on the left side (up to 10). Pressing a channel will display their sub channels (A and B), which can be edited.

6) For each of the channels and sub channels, set the Enabled to **ON**, Function to **TC sensor type E**, Extra sampling display to **0ms**, Wiring length to **0m**, Open Circuit Detect to **ON**, and CJC Type to **Internal**. Press the **Check Icon** to confirm the channel settings.

7) The displayed channel can be changed by pressing the left/right arrows at the bottom of the screen.

8) Verify the values depending on the module being used.

ADT286-TS CJC Measure (Type E)		
Channel	Test Point (°C)	Specification (°C)
CH1-01A	20	±0.100
CH1-01B	20	±0.100
CH1-02A	20	±0.100
CH1-02B	20	±0.100
CH1-03A	20	±0.100
CH1-03B	20	±0.100
CH1-04A	20	±0.100
CH1-04B	20	±0.100
CH1-05A	20	±0.100
CH1-05B	20	±0.100
CH1-06A	20	±0.100
CH1-06B	20	±0.100
CH1-07A	20	±0.100
CH1-07B	20	±0.100
CH1-08A	20	±0.100
CH1-08B	20	±0.100
CH1-09A	20	±0.100
CH1-09B	20	±0.100
CH1-10A	20	±0.100
CH1-10B	20	±0.100

ADT286-PS CJC Measure (Type E)		
Channel	Test Point (°C)	Specification (°C)
CH1-TC	20	±0.100

7.0 - CJC Calibration

1) Press the **Menu Icon** > **Setup** > **Service** > **System Calibration**.

2) Input the Calibration Password as **123456** then press the **Check Icon** to confirm.

3) Press **CJC** to calibrate the module that is connected.

4) All the channels will be displayed with their previous calibration date and value, if one has already been performed.

5) Press **CH1-01A**. Ensure the Sensor Type is set to **E**. The display will show the value of the channel (PV) and the CJC value.

6) Press **Reference** and input the value as displayed by the temperature reference on the 875.

7) Press the **Check Icon** then **OK** to save and confirm the application data for that channel.

8) Repeat the previous steps for all the other channels.

9) After recording the calibration values for all the other channels, press the **Check Icon** to update the module data.

10) Return to the Multichannel Thermometer and repeat the CJC Verification (6.0).